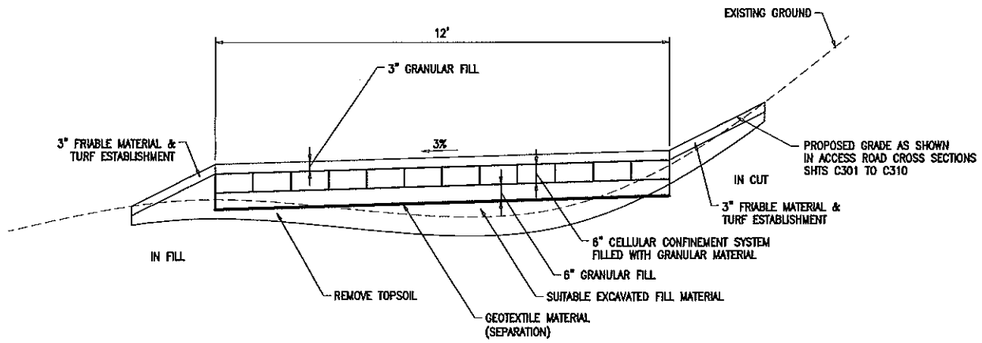

GRAVEL ACCESS ROAD DETAIL
N.T.S.

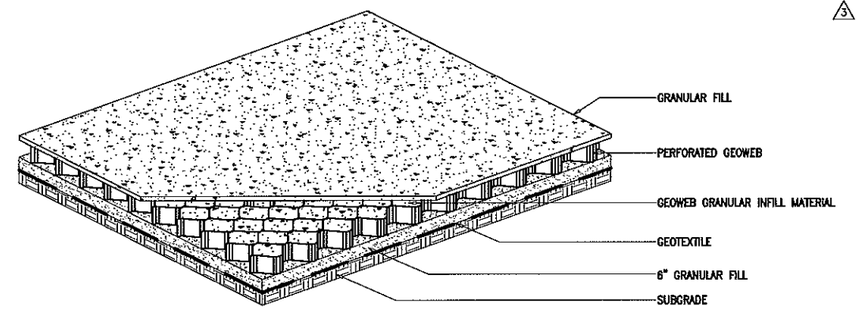

GEOWEB CELLULAR CONFINEMENT SYSTEM
ISOMETRIC DETAIL
N.T.S.

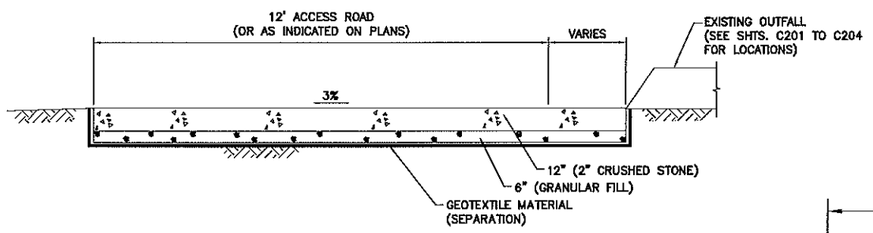

STONE CROSSING DETAIL
N.T.S.

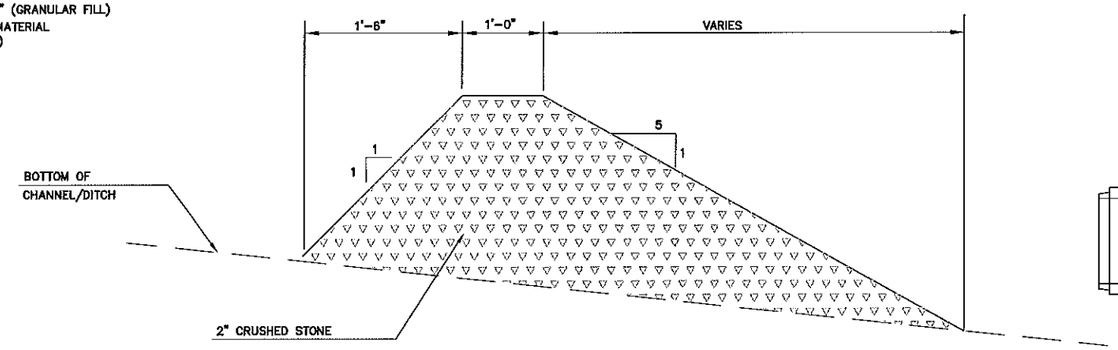

STONE CHECK DAM
N.T.S.

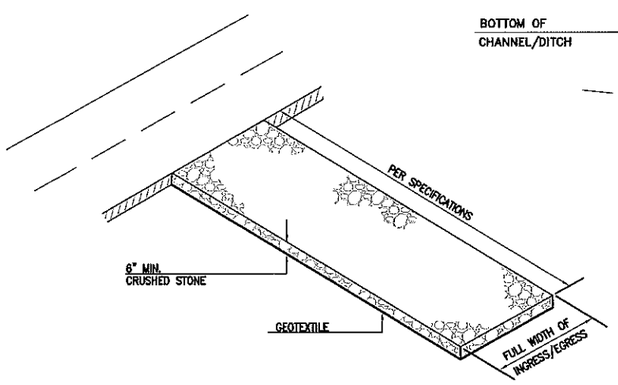

CONSTRUCTION ENTRANCE
N.T.S.

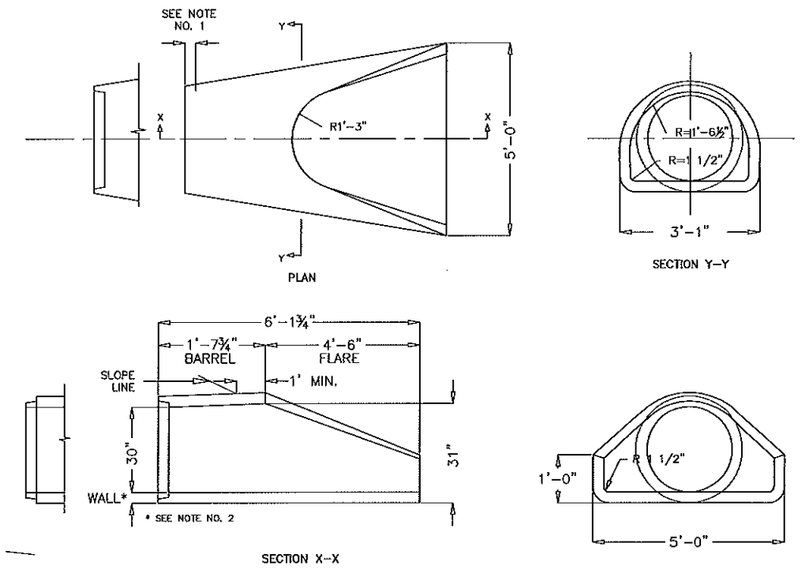

NOTES:
1. JOINTS SHALL BE TONGUE AND GROOVE OR BELL AND SPIGOT AS REQUIRED TO CONFORM TO PIPE INSTALLED.
2. WALL THICKNESS SHALL CONFORM TO PIPE THICKNESS.

REINFORCED CONCRETE CULVERT END

ADDENDUM NUMBER 2

THIS LINE IS ONE INCH LONG WHEN PLOTTED AT FULL SCALE ON A 22" X 34" DRAWING

STATE OF CONNECTICUT CHARLES G. CHIU No. 27631 LICENSED PROFESSIONAL ENGINEER

CDR MAGUIRE
2080 Silas Deane Highway
Rocky Hill, Connecticut 06067

MARK	DATE	DESCRIPTION	BY	APP'D
0	4/25/13	ISSUED FOR DEEP APPROVAL	JIG	CCC
1	7/22/13	REVISED PER DEEP COMMENTS	JIG	CCC
2	7/22/13	ISSUED FOR BID	JIG	CCC
3	8/16/13	ADDENDUM NUMBER 2	JIG	CCC

PROJECT NO.:	14712.02
DESIGNED BY:	PHG
DRAWN BY:	CAD
CHK'D BY:	CCC/MJK
DATE:	07/22/13
SCALE:	AS NOTED

SEWAGE FORCE MAIN
MIDDLETOWN, CONNECTICUT

ACCESS ROAD DETAILS

DRAWING NO.
C501

SHEET 40 OF 61

DRAWING FILE: G:\JOBS\14712.02-Middletown_PS_FM_Final_Design\ACAD\CIVIL\CONTRACT 1\CIVIL\Highway\Access Road Details.dwg PLOTTED: Aug 23,2013-2:23pm REVIEWED BY: CIVIL: INITIAL&DATE ARCH: INITIAL&DATE STRU: INITIAL&DATE PLUM: INITIAL&DATE FIRE: INITIAL&DATE MECH: INITIAL&DATE ELEC: INITIAL&DATE

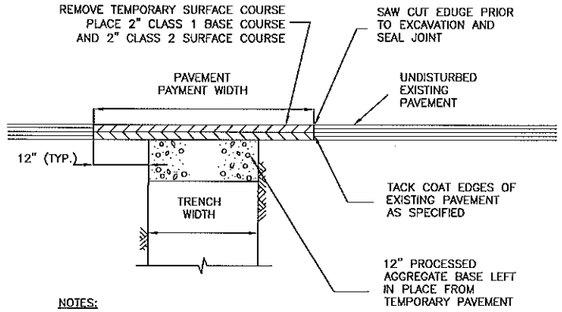

NOTES:
IF THE EXISTING PAVEMENT THICKNESS IS GREATER THAN 4" THEN THE INSTALLED THICKNESS SHALL MATCH THE EXISTING PAVEMENT THICKNESS.

PERMANENT PAVEMENT REPLACEMENT DETAIL
CITY ROADS

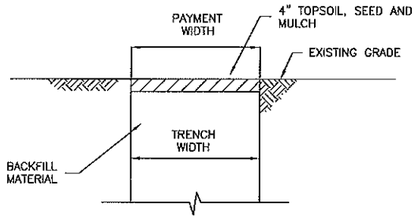

TRENCH RESTORATION IN
UNPAVED AREAS

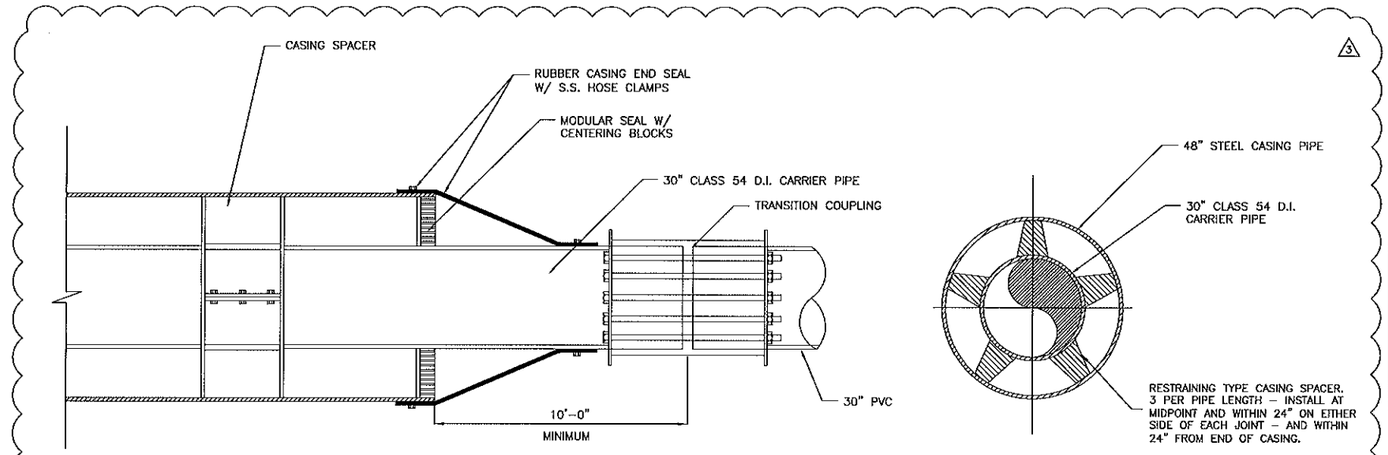

CASING PIPE END SEAL DETAIL

TYPICAL CROSS SECTION

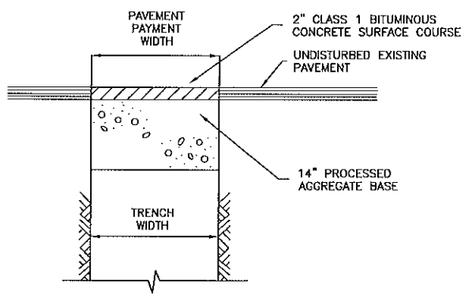

TEMPORARY PAVEMENT DETAIL
CITY ROADS

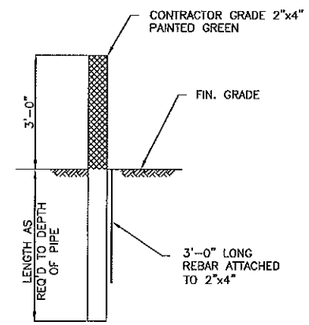

PIPE MARKER DETAIL

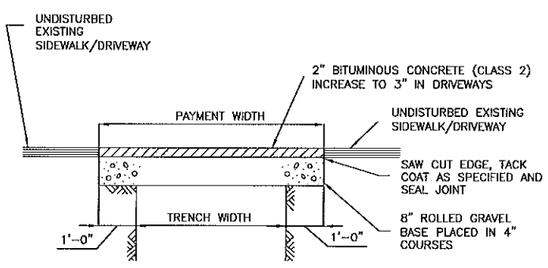

SIDEWALK AND DRIVEWAY DETAIL
BITUMINOUS CONCRETE

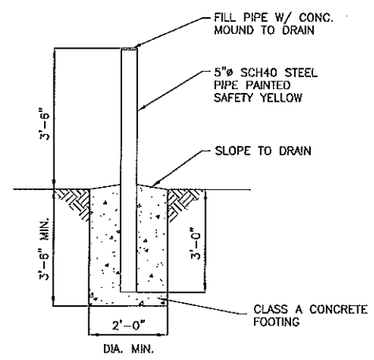

PIPE BOLLARD DETAIL

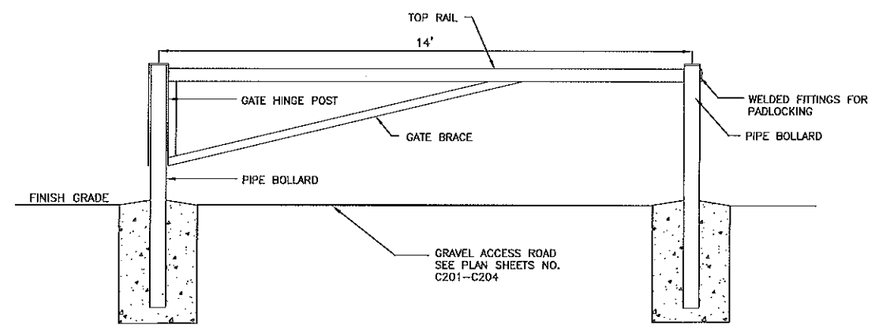

NOTE:
1. ALL PIPING TO BE SCHEDULE 40 STEEL PAINTED SAFETY YELLOW.
2. ADJUST HEIGHT OF POST AND TOP RAIL TO ALIGN LEVEL.

BARRIER GATE

ADDENDUM NUMBER 2

THIS LINE IS ONE INCH LONG WHEN PLOTTED AT FULL SCALE ON A 22" X 34" DRAWING

STATE OF CONNECTICUT · CHARLES C. CIVIL · No. 27631 · LICENSED · PROFESSIONAL ENGINEER

CDR | MAGUIRE
2080 Silas Deane Highway
Rocky Hill, Connecticut 06067

MARK	DATE	DESCRIPTION	BY	APP'D
0	4/25/13	ISSUED FOR DEEP APPROVAL	JIG	CCC
1	7/22/13	REVISED PER DEEP COMMENTS	JIG	CCC
2	7/22/13	ISSUED FOR BID	JIG	CCC
3	8/16/13	ADDENDUM NUMBER 2	JIG	CCC

PROJECT NO.: 14712.02
DESIGNED BY: CC
DRAWN BY: JG
CHK'D BY: CCC/MJK
DATE: 07/22/13
SCALE: NTS

SEWAGE FORCE MAIN
MIDDLETOWN, CONNECTICUT

MISCELLANEOUS DETAILS III

DRAWING NO.
C506

SHEET 45 OF 61

DRAWING FILE: G:\JOBS\14712.02-Middletown_PS_FM_Final_Design\ACAD\DWG\CONSTRACT 1\DWG\2013-02-26 14712 Detail Sheets.dwg PLOTTED: Aug 23,2013-2:25PM BY: CCC(JIG)

ELEC: INITIALS/DATE MECH: INITIALS/DATE FIRE: INITIALS/DATE PLUM: INITIALS/DATE STRU: INITIALS/DATE ARCH: INITIALS/DATE CIVIL: INITIALS/DATE